ULDC-800-MC

DEVICE

Universal Laser Diode Controller, up to 800mA

OVERVIEW

The Optilab ULDC-800-MC is a fully integrated Universal Laser Diode Controller designed for 14 pin butterfly package. This compact, easy to use laser diode driver module operates under a single + 5 V power supply. ULDC-800-MC offers LD current and temperature control that comes with a built in LCD display and a USB port for external PC control. The module is equipped with an adapter board, thus making it compatible with 14 pin butterfly LD module for any laser manufacturers by switching the daughter boards provided in the package. It features LD current range of 0-800 mA with a setting resolution of 1 mA and temperature range of 15 °C-35 °C with a setting resolution of 0.1 °C.

FEATURES

- LD Current and Temperature Control
- 800 mA LD Current
- 1.5 A TEC Current
- On Board LCD Display
- USB Port for External PC Control
- Compatible with Any Pinout

USE IN

- Laser Diode Characterization
- Research and Development
- Laboratory Use
- Failure Analysis

FUNCTION DIAGRAM

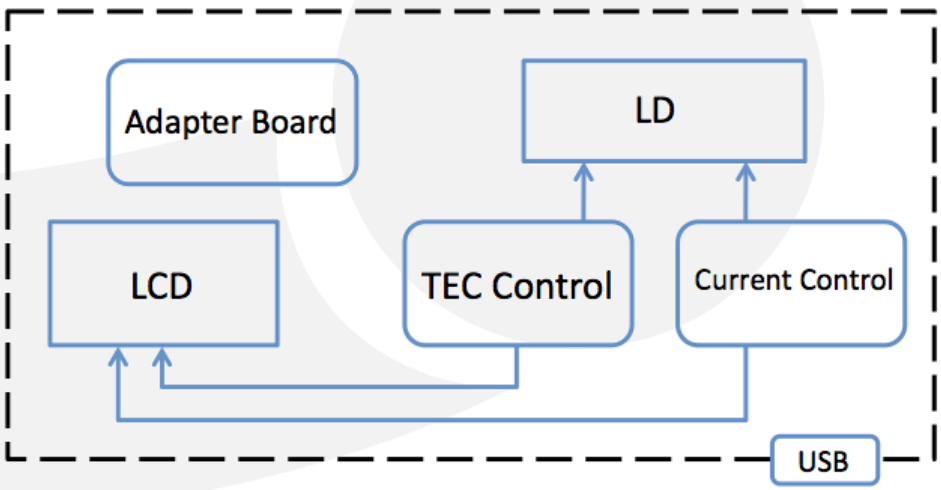

Product specifications and description are subject to change without notice. © 2022 Optilab, ULDC-800-MC. Apr 2022 Rev. 1.0

ULDC-800-MC

SPECIFICATIONS

GENERAL

Laser Diode Module Type	14 Pin Butterfly Package
LD Operation Mode	ACC
LD Current Setting	1 – 800 mA
Setting Resolution	1 mA
Measurement Resolution	0.1 mA
LD Current Limiter Setting	100 – 800 mA
Setting Resolution	10 mA
LD Voltage	0 – 3 V
TEC Current Setting	100 mA – 1500 mA
TEC Setting Resolution	100 mA
TEC Current Measurement Resolution	1 mA
Setting Range	15 °C – 35 °C
Setting Resolution	0.1 °C

MECHANICAL

OperatingTemperature	15 °C to +35 °C
Storage Temperature	0 °C to +60 °C
Operating Humidity	0% to 85% Relative Humidity
Communication	USB / RS-485
Dimension	61 mm x 130 mm x 145 mm
Display	OLED
Power Supply	+5 V DC, 4 A

ULDC-800-MC

LASER DIODE PINOUT TYPE 1

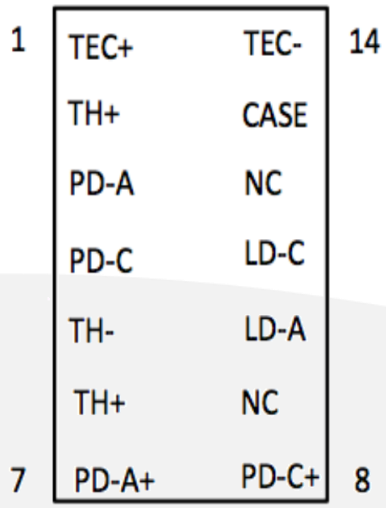

LASER DIODE PINOUT TYPE 2

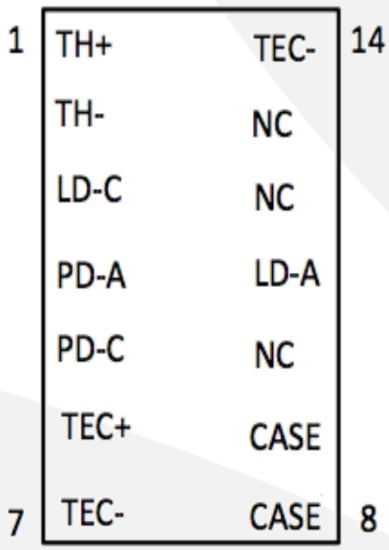

ACCESSORIES

1. Universal Laser Diode Controller – 1
2. Daughter Board – (Type 1, 2, and 3)
3. Insulation Sheet – 1
4. Plastic Screws – 4
5. AC Adapter – 1

LASER DIODE PINOUT TYPE 3

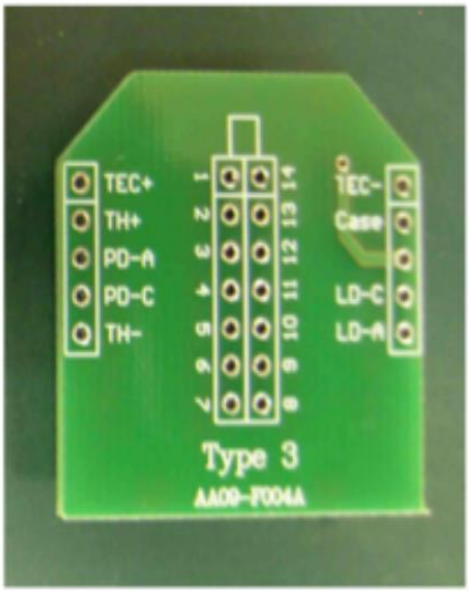

Product specifications and description are subject to change without notice. © 2022 Optilab, ULDC-800-MC. Apr 2022 Rev. 1.0